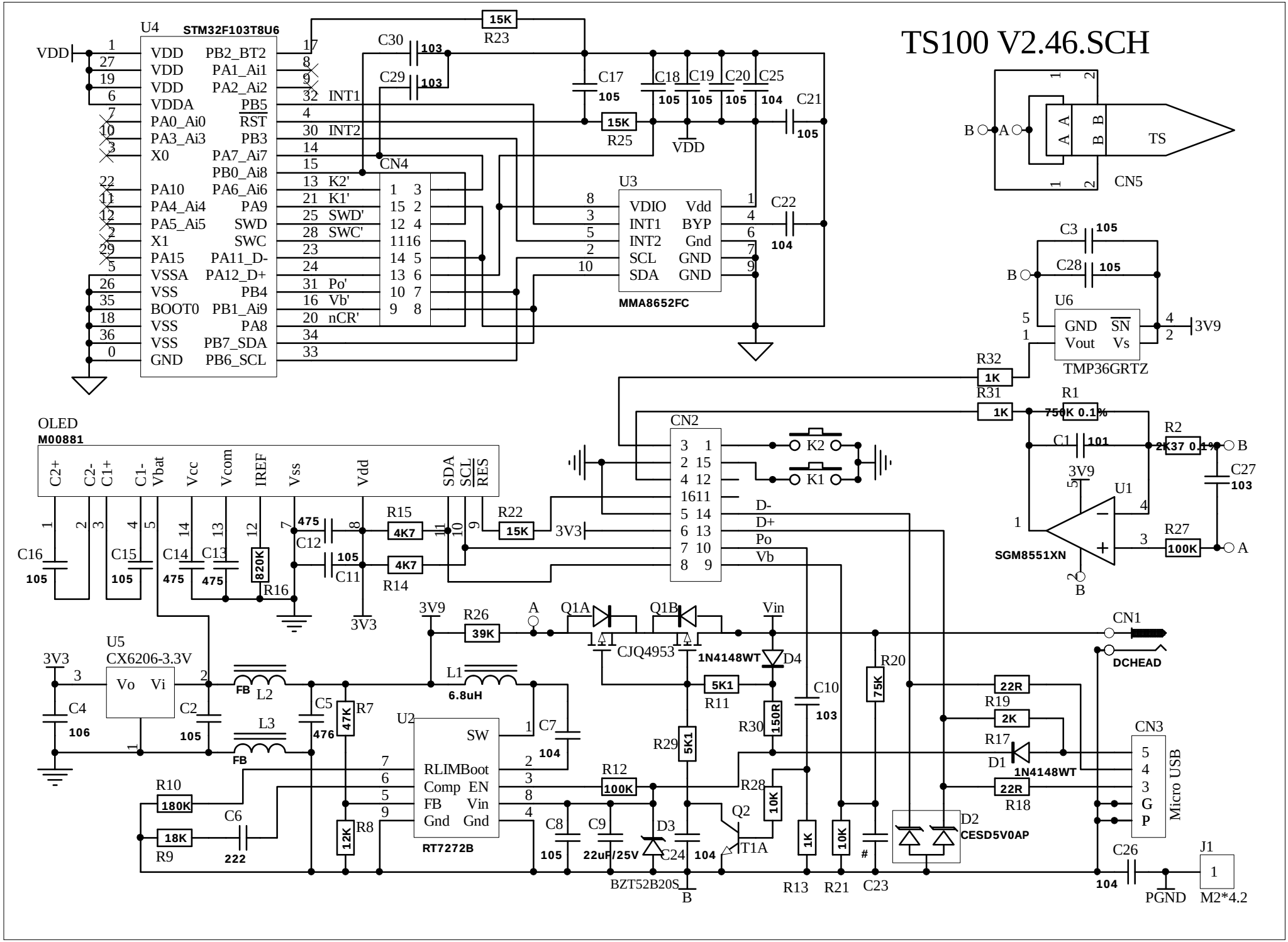
TS100 V2.46.SCH
U4
STM32F103T8U6
VDD
VDD
VDD
VDDA
PA0_Ai0
PA3_Ai3
X0
PA10
PA4_Ai4
PA5_Ai5
X1
PA15
VSSA
VSS
BOOT0
VSS
VSS
GND
PB2_BT2
PA1_Ai1
PA2_Ai2
PB5
RST
PB3
PA7_Ai7
PB0_Ai8
PA6_Ai6
PA9
SWD
SWC
PA11_D-
PA12_D+
PB4
PB1_Ai9
PA8
PB7_SDA
PB6_SCL
INT1
INT2
K2'
K1'
SWD'
SWC'
Po'
Vb'
nCR'
C30 103
C29 103
15K R23
C17 105
C18 105
C19 105
C20 105
C25 104
C21 105
15K R25
VDD
CN4
U3
VDIO
INT1
INT2
SCL
SDA
Vdd
BYP
Gnd
GND
GND
MMA8652FC
C22 104
B
A
A A
B B
TS
CN5
C3 105
C28 105
U6
GND
Vout
SN
Vs
TMP36GRTZ
3V9
R32 1K
R31 1K
R1 750K 0.1%
R2 2K37 0.1%
C1 101
C27 103
U1
SGM8551XN
R27 100K
OLED
M00881
C2+
C2-
C1+
C1-
Vbat
Vcc
Vcom
IREF
Vss
Vdd
SDA
SCL
RES
C16 105
C15 105
C14 475
C13 475
820K R16
C12 475
C11 105
R15 4K7
R14 4K7
R22 15K
3V3
CN2
K2
K1
D-
D+
Po
Vb
3V9
R26 39K
A
Q1A
Q1B
CJQ4953
1N4148WT D4
Vin
CN1
DCHEAD
U5
CX6206-3.3V
Vo
Vi
C4 106
C2 105
FB L2
L3 FB
C5 476
R7 47K
L1 6.8uH
C7 104
U2
SW
RLIMBoot
Comp EN
FB Vin
Gnd Gnd
RT7272B
R10 180K
R9 18K
C6 222
R8 12K
R12 100K
C8 105
C9 22uF/25V
D3 BZT52B20S
C24 104
R29 5K1
R11 5K1
R30 150R
R28 10K
Q2 T1A
C10 103
R13 1K
R21 10K
C23 #
R20 75K
D2 CESD5V0AP
22R R19
2K
R17
D1 1N4148WT
22R R18
CN3
Micro USB
G
P
C26 104
J1
PGND
M2*4.2